Current part is item (13) on diagram. Available at www.oshkoshequipment.com

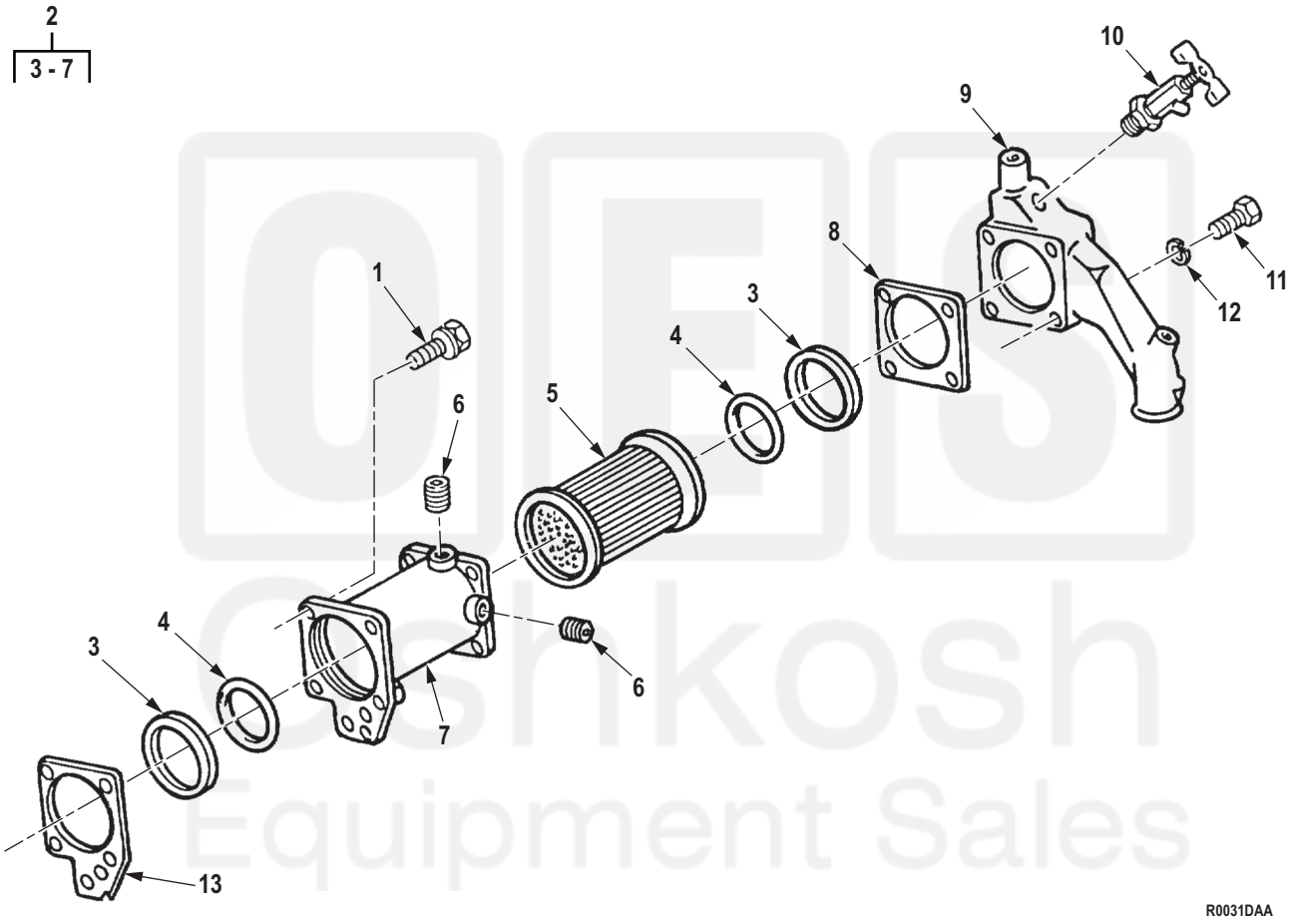

Figure 31. Engine Oil Cooler Assembly (M939, M939A1).

Current part is item (13) on diagram. Available at www.oshkoshequipment.com

Current part is item (13) on diagram. Available at www.oshkoshequipment.com

(1) ITEM NO.	(2) SMR CODE	(3) NSN	(4) CAGEC	(5) PART NUMBER	(6) DESCRIPTION AND USABLE ON CODE (UOC)	(7) QTY
					GROUP 0106 ENGINE LUBRICATION SYSTEM.	
					FIG. 31. ENGINE OIL COOLER ASSEMBLY (M939, M939A1).	
1	PAFZZ	5305-01-088-6019	15434	3010596	SCREW,ASSEMBLED WAS UOC: DAC,DAD,DAE,DAF,DAG,DAH,DAJ,DAL,DAW,DAX,V14,V15,V16,V17,V18,V19,V20,V21,V22,V24	5
2	PAFFF	2930-01-117-5238	15434	AR5128800	COOLER,LUBRICATING UOC: DAC,DAD,DAE,DAF,DAG,DAH,DAJ,DAL,DAW,DAX,V14,V15,V16,V17,V18,V19,V20,V21,V22,V24	1
3	PAFZZ	5330-00-785-7894	15434	110827	. RETAINER,PACKING PART OF KIT P/N 3011472 UOC: DAC,DAD,DAE,DAF,DAG,DAH,DAJ,DAL,DAW,DAX,V14,V15,V16,V17,V18,V19,V20,V21,V22,V24	2
4	PAFZZ	5331-01-160-7458	15434	3019116	. O-RING PART OF KIT P/N 3011472, PART OF KIT P/N AR51481 UOC: DAC,DAD,DAE,DAF,DAG,DAH,DAJ,DAL,DAW,DAX,V14,V15,V16,V17,V18,V19,V20,V21,V22,V24	2
5	PAFZZ	2930-00-701-2091	15434	110848	. ELEMENT,OIL COOLER UOC: DAC,DAD,DAE,DAF,DAG,DAH,DAJ,DAL,DAW,DAX,V14,V15,V16,V17,V18,V19,V20,V21,V22,V24	1
6	PAFZZ	4730-00-954-1281	58536	AA59616ACABCB	. PLUG,PIPE UOC: DAC,DAD,DAE,DAF,DAG,DAH,DAJ,DAL,DAW,DAX,V14,V15,V16,V17,V18,V19,V20,V21,V22,V24	2
7	PAFZZ	2815-00-430-2090	15434	127863	. HOUSING,LUBE OIL CO UOC: DAC,DAD,DAE,DAF,DAG,DAH,DAJ,DAL,DAW,DAX,V14,V15,V16,V17,V18,V19,V20,V21,V22,V24	1
8	PAFZZ	5330-00-328-8656	15434	68210	GASKET PART OF KIT P/N 3011472, PART OF KIT P/N AR51481 UOC: DAC,DAD,DAE,DAF,DAG,DAH,DAJ,DAL,DAW,DAX,V14,V15,V16,V17,V18,V19,V20,V21,V22,V24	1
9	PAFZZ	5340-01-157-9898	15434	3030464	COVER,ACCESS UOC: DAC,DAD,DAE,DAF,DAG,DAH,DAJ,DAL,DAW,DAX,V14,V15,V16,V17,V18,V19,V20,V21,V22,V24	1
10	PAFZZ	4820-00-845-1096	58536	AA59440/2-010	COCK,DRAIN UOC: DAC,DAD,DAE,DAF,DAG,DAH,DAJ,DAL,DAW,DAX,V14,V15,V16,V17,V18,V19,V20,V21,V22,V24	1

Current part is item (13) on diagram. Available at www.oshkoshequipment.com

Current part is item (13) on diagram. Available at www.oshkoshequipment.com

(1) ITEM NO.	(2) SMR CODE	(3) NSN	(4) CAGEC	(5) PART NUMBER	(6) DESCRIPTION AND USABLE ON CODE (UOC)	(7) QTY
11	PAFZZ	5305-00-177-5552	15434	S126	SCREW,CAP,HEXAGON H UOC: DAC,DAD,DAE,DAF,DAG,DA H,DAJ,DAL,DAW,DAX,V14,V15,V16, V17,V18,V19,V20,V21,V22,V24	4
12	PAFZZ	5310-00-637-9541	00198	132661	WASHER,LOCK UOC: DAC,DAD,DAE,DAF,DAG,DA H,DAJ,DAL,DAW,DAX,V14,V15,V16, V17,V18,V19,V20,V21,V22,V24	4
13	PAFZZ	5330-01-079-6514	15434	3008017	GASKET PART OF KIT P/N 3011472, PART OF KIT P/N AR51481 UOC: DAC,DAD,DAE,DAF,DAG,DA H,DAJ,DAL,DAW,DAX,V14,V15,V16, V17,V18,V19,V20,V21,V22,V24	1

END OF FIGURE

Current part is item (13) on diagram. Available at www.oshkoshequipment.com